The Land of Nod®

ACTIVITY TABLE and PAPER ROLLER

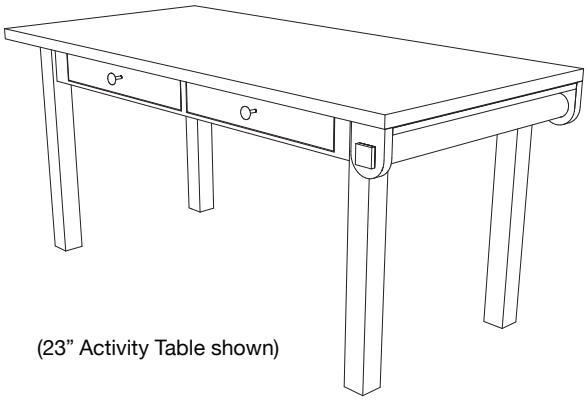

(23” Activity Table shown)

Thank you for purchasing the **15/23” Activity Table**
This page lists all the contents included in the box. Please take the time to identify the hardware as well as the individual components to this product. As you unpack and prepare for assembly, place the contents on a carpeted or padded area to protect them from damage.
Note: 2 people are required to safely assemble this product.

⚠ **WARNING:** Adult Assembly Required

HARDWARE

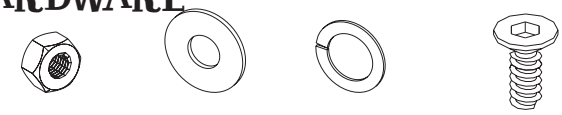

8 - hex nuts | 8 - flat washers | 8 - spring washers | 3 - bolts

Missing hardware? Please call **800.933.9904** for replacements.

TOOLS REQUIRED

hex wrench (included)

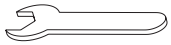

allen wrench (included)

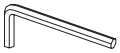

COMPONENTS

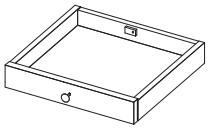

2 - drawer assemblies

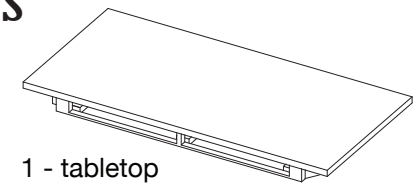

1 - tabletop assembly

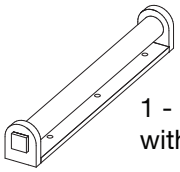

1 - paper roller with paper

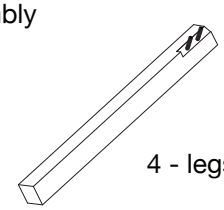

4 - legs

ASSEMBLY

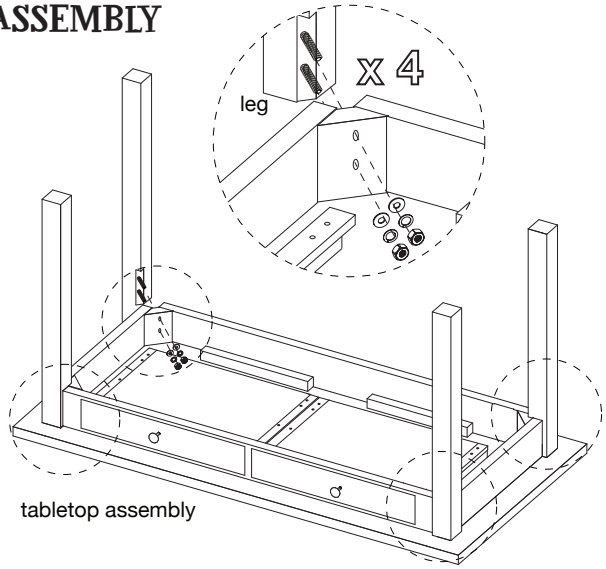

With the assistance of another adult, carefully position **tabletop assembly** upside down onto a clean, padded surface as shown. Fit threaded studs of each **leg** into corresponding holes of **tabletop** and attach with 2 **hex nuts**, 2 **spring washers** and 2 **flat washers** as shown. Secure, but do not over tighten, nuts with a **hex wrench**. With assistance of another adult, position unit upright as shown.

1

REMOVING DRAWERS

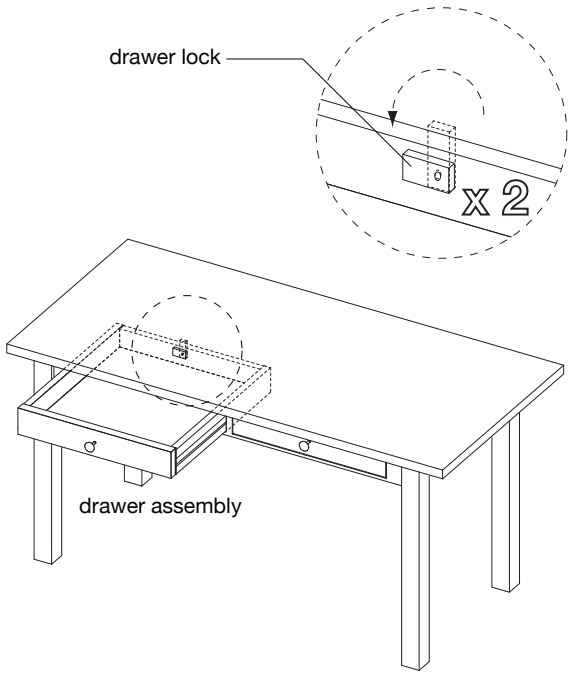

To remove drawers from table, open each drawer halfway and rotate *drawer lock* 90º to unlock.

The Land of Nod®

ACTIVITY TABLE and PAPER ROLLER

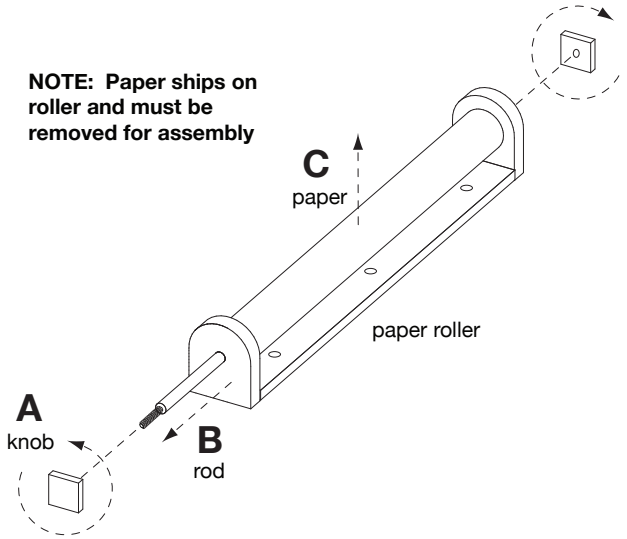

A) Unscrew **knobs** from **paper roller**. Turn counter-clockwise to remove.
B) Pull-out **rod** from **paper roller**.
C) Remove **paper** from **paper roller**. Set paper aside until further instructions.

2

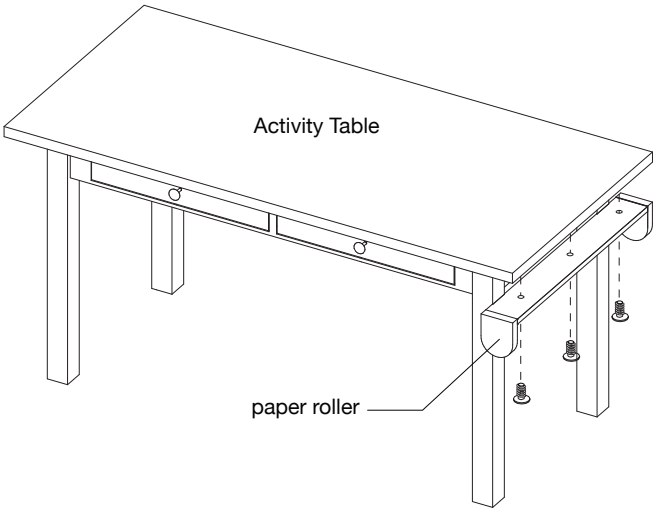

Attach **paper roller** to **Activity table** with 3 **bolts** as shown. Secure, but do not over tighten, bolts with an **allen wrench**.

3

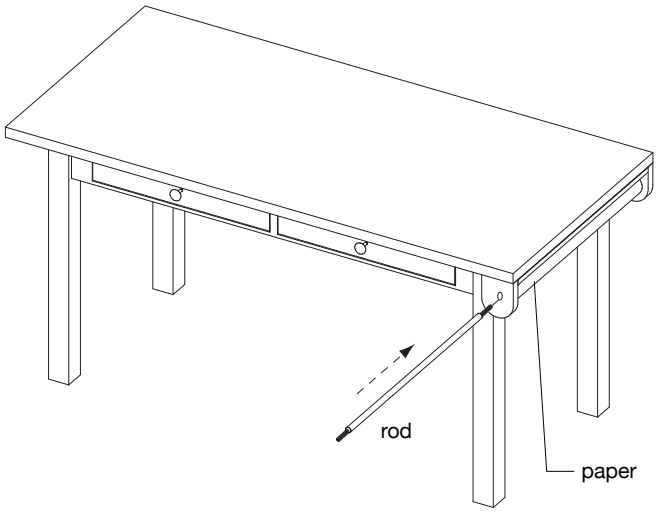

Insert **paper** between roller sides and insert **rod** as shown.

4

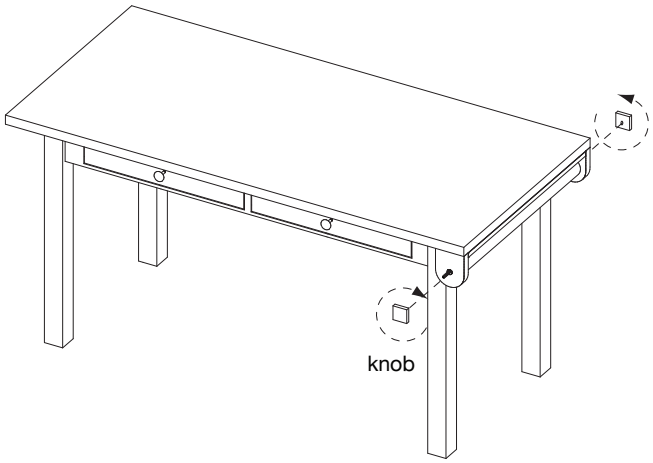

Attach 2 **knobs** to **paper roller**. Turn each knob clockwise to secure.
Assembly is now complete.

5

CLEANING AND CARE

Clean surfaces with a dry or damp soft cloth. Do not use abrasive cleaners. Do not use furniture wax or polish as the unit is finished with a protective clear lacquer.