⚠ WARNING:

- Failure to follow these warnings and assembly instructions could result in serious injury or death.
- Read all instructions before assembling crib. Keep instructions for future use.

⚠ WARNING:

-Infants can suffocate on soft bedding. Never add a pillow or comforter. Never place additional padding under an infant.
-To reduce the risk of SIDS, pediatricians recommend healthy infants be placed on their backs to sleep, unless otherwise advised by your physician.

Strangulation Hazard:
- Strings can cause strangulation! DO NOT place items with a string, cord or ribbon around a child's neck, such as hood strings or pacifier cords. DO NOT suspend strings over crib or toddler bed, or attach strings to toys for any reason.
-To help prevent strangulation, tighten all fasteners. A child can trap parts of the body or clothing on loose fasteners.
- DO NOT place crib or toddler bed near windows where cords from blinds or drapes may strangle a child.

Fall Hazard:
- When child is able to pull to standing position, set mattress to lowest position and remove bumper pads, large toys and other objects that could serve as steps for climbing out.
-When child is able to climb out or reaches the height of 35 inches (90 cm), the crib shall no longer be used and the child should be placed in a youth or regular bed.

Made in China - r07

The Land of Nod
8135 River Drive • Morton Grove, IL 60053 • p: (800) 933-9904 • e: customerservice@landofnod.com • www.landofnod.com

This page lists the contents included in the box. Please take time to identify the hardware as well as the individual components of the product. As you unpack and prepare for assembly, place the contents on a carpeted or padded area to protect them from damage. Please follow the assembly instructions closely. Improper assembly can result in personal or property damage.

Note: 2 adults are required to safely assemble this product.

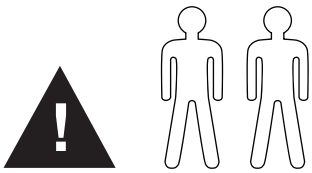

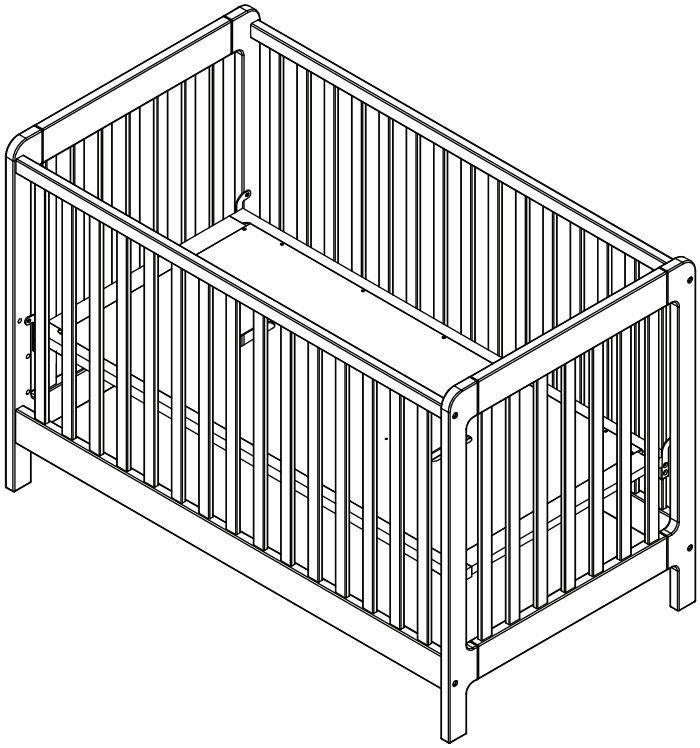

8 - Small Bolts

8 - Large Bolts

4 - Medium Bolts

12- Lock Washers

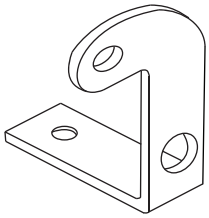

2 - Brackets

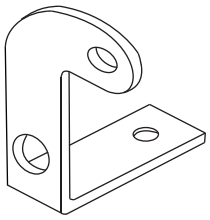

2 - Brackets

NOTE: DO NOT USE POWER TOOLS

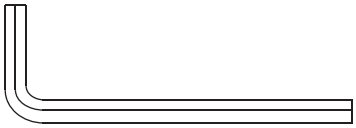

1 - Allen Wrench

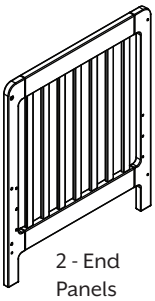

2 - End Panels

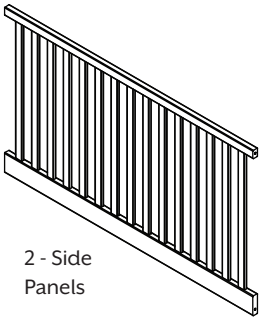

2 - Side Panels

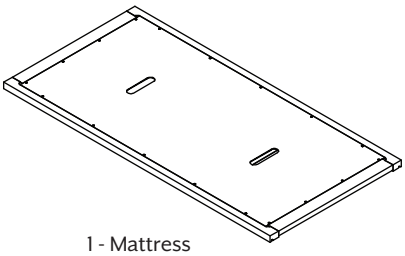

1 - Mattress Support

The Land of Nod

8135 River Drive • Morton Grove, IL 60053 • p: (800) 933-9904 • e: customerservice@landofnod.com • www.landofnod.com

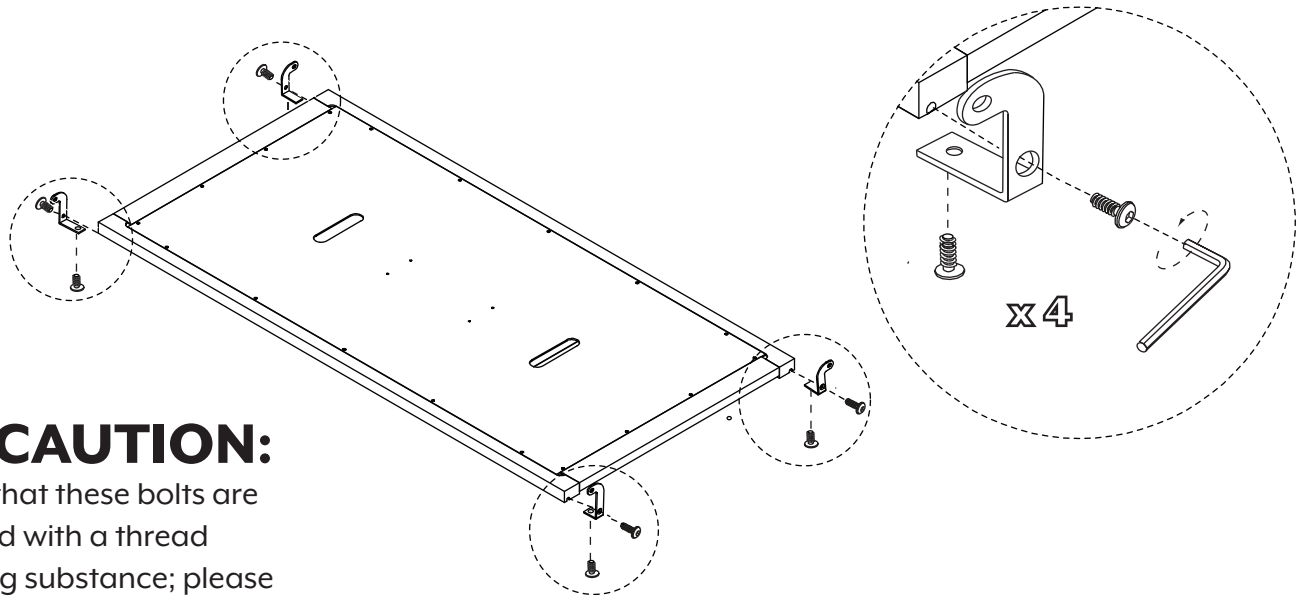

⚠ CAUTION:

Note that these bolts are coated with a thread locking substance; please be cautious of stripping the bolts during assembly.

1 Mount **brackets** to the **mattress support** with **8 small bolts** and using the **allen wrench** provided.

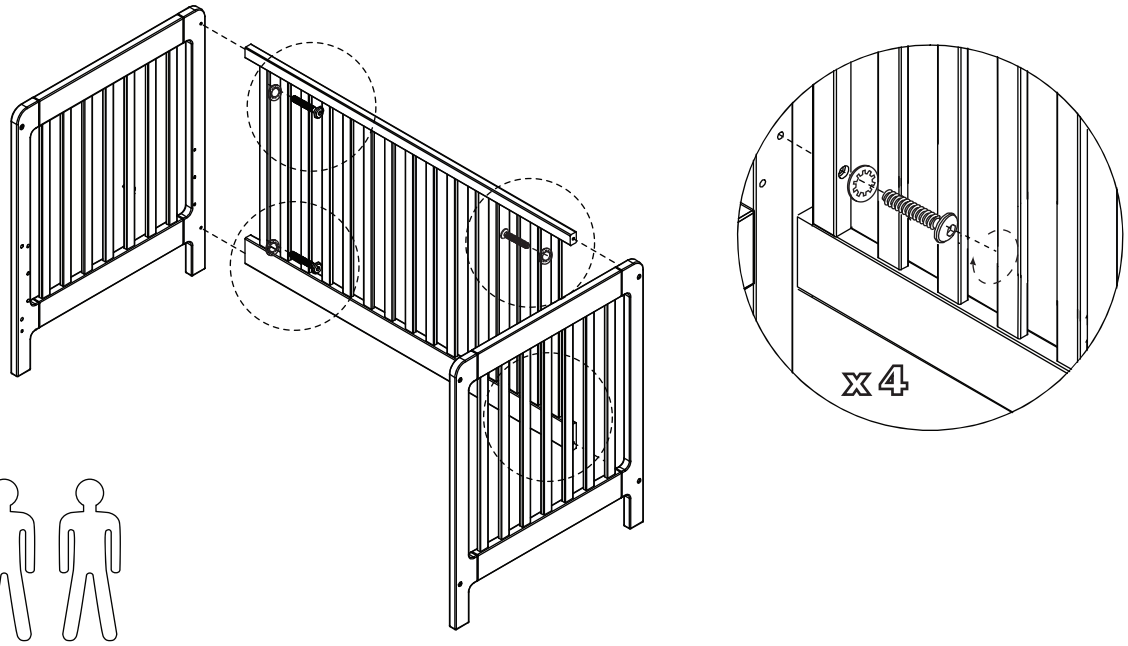

2 With assistance of another adult, mount one **side panel** to the rear posts of the **end panels**. Use 4 **large bolts** and 4 **lock washers** to LOOSELY fasten the side panel to the headboard posts. DO NOT fully tighten the bolts until instructed in step 4.

Made in China - r07

The Land of Nod

8135 River Drive • Morton Grove, IL 60053 • p: (800) 933-9904 • e: customerservice@landofnod.com • www.landofnod.com

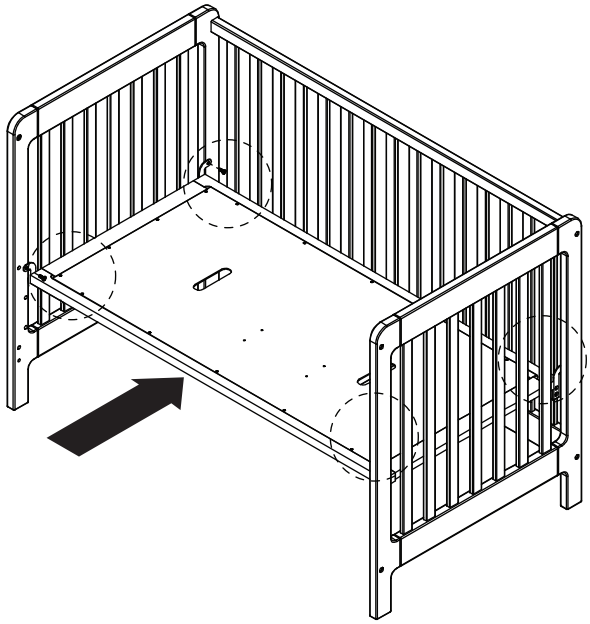

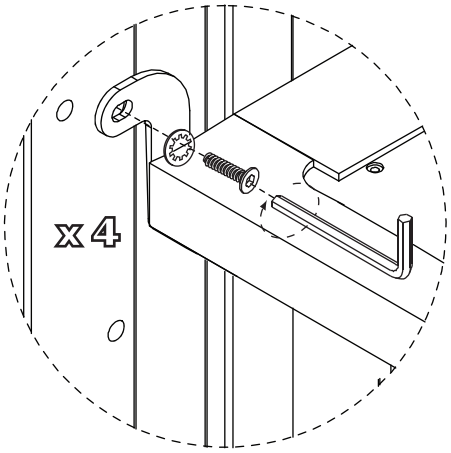

3 Attach the **mattress support** to the **side panel** and the **end panel** with 4 **medium bolts**, 4 **lock washers** and secure with the **allen wrench** to fasten. Do not fully tighten bolts until instructed in step 4.

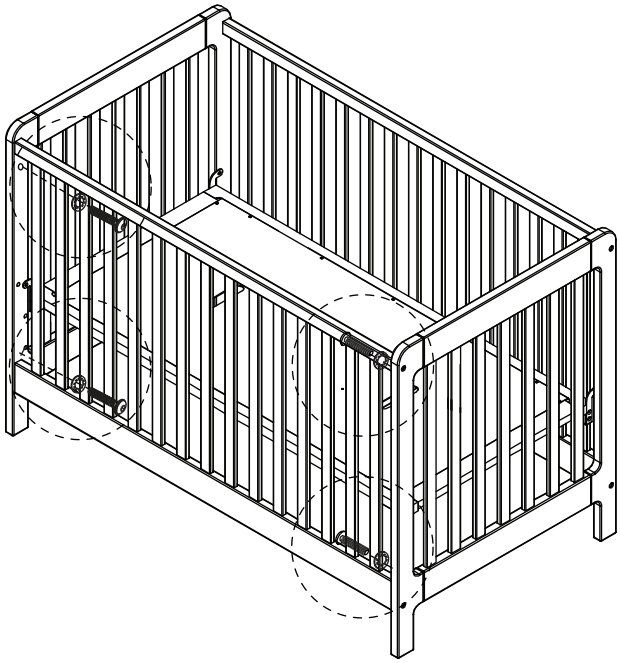

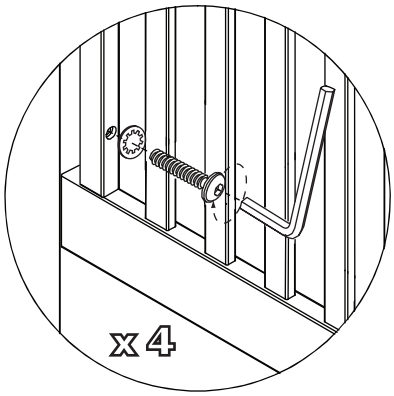

4 Attach the second **side panel** to the two **end panels** using 4 **large bolts,** 4 **lock washers** and the **allen wrench**. Assembly is now complete. At this point fully tighten all bolts, taking care not to apply excessive force, using the **allen wrench** provided.

Made in China- r07

The Land of Nod

8135 River Drive • Morton Grove, IL 60053 • p: (800) 933-9904 • e: customerservice@landofnod.com • www.landofnod.com

⚠ **CAUTION:** ANY MATTRESS USED IN THIS CRIB MUST BE AT LEAST 27-1/4 INCHES (69 cm) BY 51-5/8 INCHES (131 cm) WITH A THICKNESS NO LESS THAN 4 INCHES (11cm) AND NOT EXCEEDING 6 INCHES (15cm).

- Check this product for damaged hardware, loose joints, missing parts or sharp edges before and after assembly and frequently during use. Securely tighten loose bolts and other fasteners. DO NOT use crib if any parts are missing, damaged, or broken.
Contact The Land of Nod® for replacement parts and instructional literature if needed.
DO NOT substitute parts.
-If refinishing, use a non-toxic finish specified for children's products.
- Never use plastic shipping bags or other plastic film as mattress covers because they can cause suffocation.
- Infants can suffocate in gaps between crib sides and a mattress that is too small.
- Periodically check to see that all bolts are securely tightened.
- To clean crib: wipe with clean soft cloth dampened with mild cleanser and water. Rinse with clean water using a soft cloth, and dry thoroughly.
- Follow warnings on all products in a crib.
- When a vaporizer is in use, always aim vapor steam away from crib as well as away from any other wood furniture.

Made in China - r07

The Land of Nod
8135 River Drive • Morton Grove, IL 60053 • p: (800) 933-9904 • e: customerservice@landofnod.com • www.landofnod.com

Once the crib is in use, periodically check to make sure all bolts are tight, and tighten as necessary. For future use, keep these instructions in the plastic bag attached to the mattress support spring.

MAINTENANCE

Upon completion of assembly be sure all screws, bolts and fastening devices have been tightened securely. Periodically repeat this check to make sure all screws, bolts and fastening devices are tight. Before each usage or assembly, inspect crib for damaged hardware, loose joints, missing parts or sharp edges. DO NOT use crib if parts are missing or broken. DO NOT substitute parts. DO NOT make any alteration to this crib.

CLEANING

Mix together a mild solution of gentle dishwashing liquid and water, apply to crib surface using a soft clean cloth lightly dampened in the solution. Rinse with clean water again using a soft clean cloth, then dry all surfaces thoroughly with a soft dry cloth. NO ABRASIVE CLEANERS, SCOURING PADS, STEEL WOOL OR COARSE RAGS SHOULD BE USED TO CLEAN THIS FINE FURNITURE.

STORAGE

A plastic pouch is attached to the crib for the storage of the assembly directions for future referral. After completing the assembly process you are advised to read and beware of all WARNINGS, CAUTIONS, CLEANING, STORAGE, USE AND MAINTENANCE notices contained in these instructions. We caution you not to place excess hardware in the plastic pouch as it could present danger to a child if retrieved and it could also puncture the crib mattress. For long term storage of the crib, store in a cool, dry place and keep away from moisture and extreme temperature changes.

The Land of Nod

8135 River Drive • Morton Grove, IL 60053 • p: (800) 933-9904 • e: customerservice@landofnod.com • www.landofnod.com