This page lists the contents included in the box. Please take time to identify the hardware as well as the individual components of the product. As you unpack and prepare for assembly, place the contents on a carpeted or padded area to protect them from damage. Please follow the assembly instructions closely. Improper assembly can result in personal or property damage.

Note: 2 adults are required to safely assemble this product.

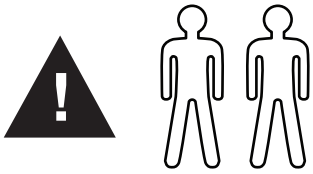

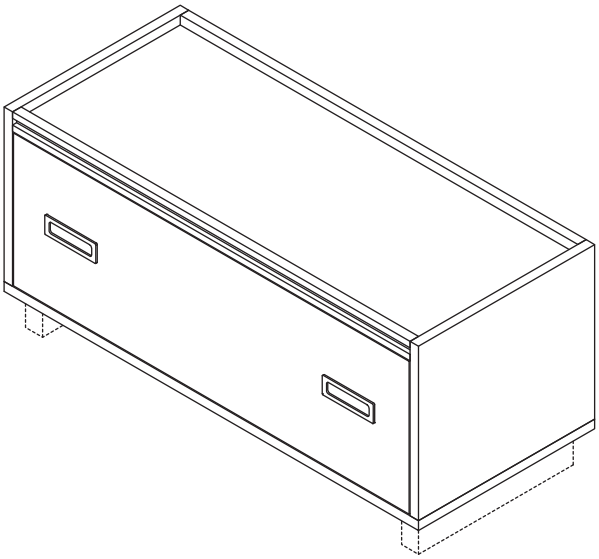

NOTE: Base sold separately

x 08

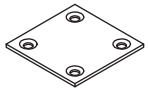

x 02

x 04

x 04

x 04

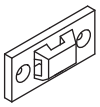

x 04

x 02

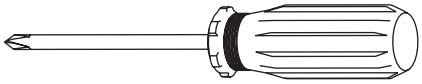

NOT INCLUDED

Made in Vietnam - r04

The Land of Nod

8135 River Drive • Morton Grove, IL 60053 • p: (800) 933-9904 • e: customerservice@landofnod.com • www.landofnod.com

MULTIPLE ELEVATE UNIT ASSEMBLY

If stacking Elevate pieces atop one another, it is suggested that the pieces be secured together. As shown in the assembly instructions, connect units together using connecting plates and hardware provided, and secure to wall with anti-tip kit provided. Note that when stacking pieces, for safety reasons utilize legs only on the bottom unit.

Note: When stacking other pieces with the large cube with drawer, only one drawer unit may be used per assembly and the drawer unit must be the bottommost piece for stability reasons. We suggest that bookcases using the larger cube drawer only be two units high. For bookcases consisting only of small cubes or large cubes, we do not suggest stacking more than three units high.

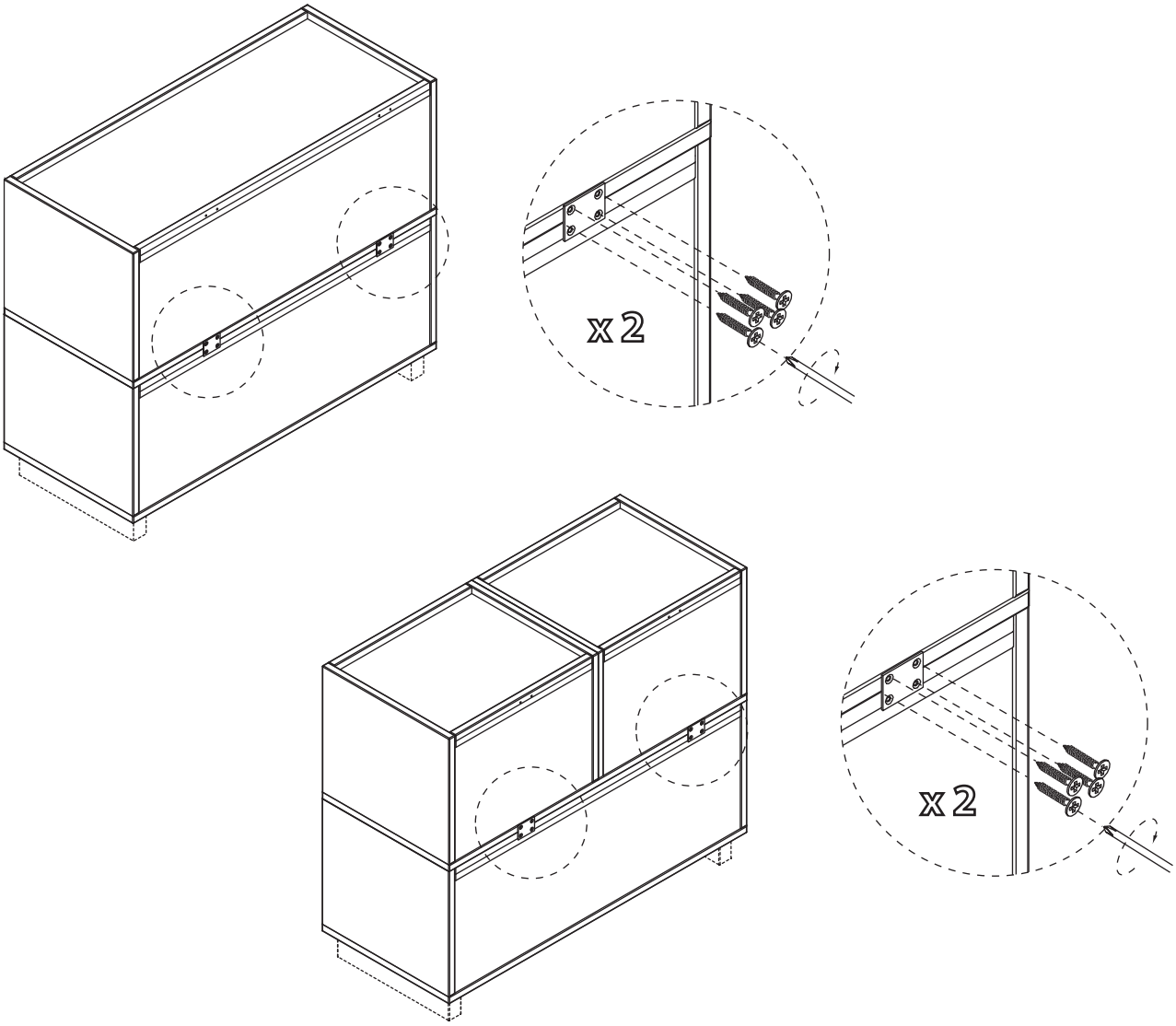

The Land of Nod
8135 River Drive • Morton Grove, IL 60053 • p: (800) 933-9904 • e: customerservice@landofnod.com • www.landofnod.com

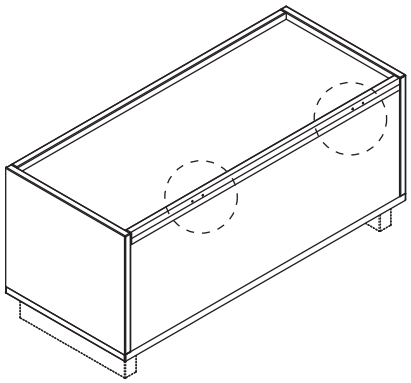

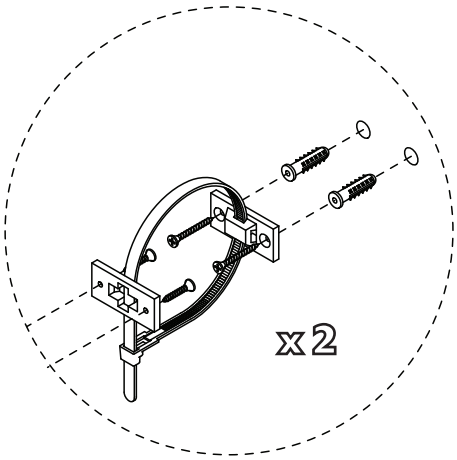

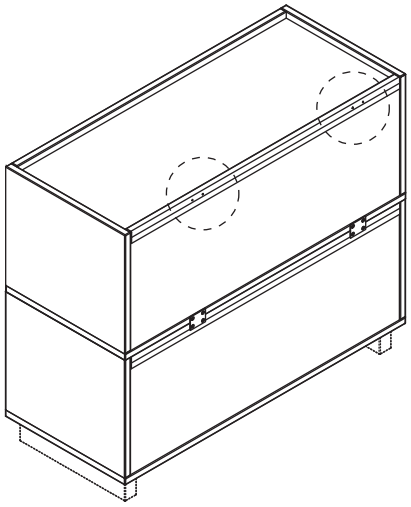

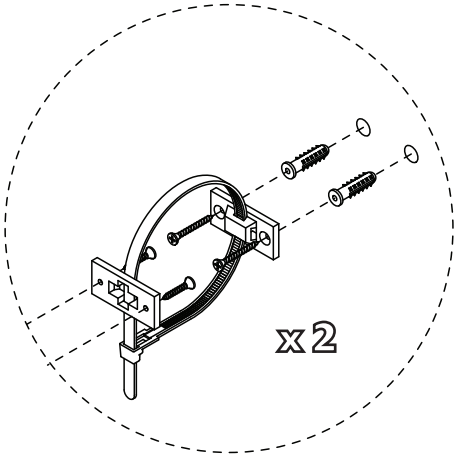

SAFETY MOUNTING INSTRUCTIONS:

For added safety and stability, it is recommended that the wall mounting hardware be installed. For safe mounting, it is essential to use wall anchors appropriate to your wall type (i.e. plaster, drywall, concrete, etc.). Mount to wood studs whenever possible.

NOTE: If you are unsure about your wall type or what mounting method you should use, consult a qualified professional or your local hardware store.

Serious or fatal crushing injuries can occur from furniture tip over. Use of tip-over restraints may only reduce, but not eliminate, the risk of tip-over. To help prevent tip-over, install tip restraint per instructions below.

CLEANING AND CARE:

Clean surfaces with a dry or damp soft cloth. Do not use abrasive cleaners. Periodically check and tighten hardware as necessary.

Made in Vietnam - r04

The Land of Nod

8135 River Drive • Morton Grove, IL 60053 • p: (800) 933-9904 • e: customerservice@landofnod.com • www.landofnod.com