This page lists the contents included in the box. Please take time to identify the hardware as well as the individual components of the product. As you unpack and prepare for assembly, place the contents on a carpeted or padded area to protect them from damage. Please follow the assembly instructions closely. Improper assembly can result in personal or property damage.

Note: 2 adults are required to safely assemble this product.

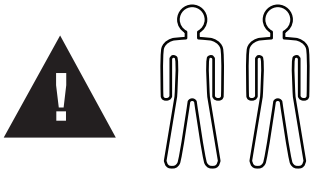

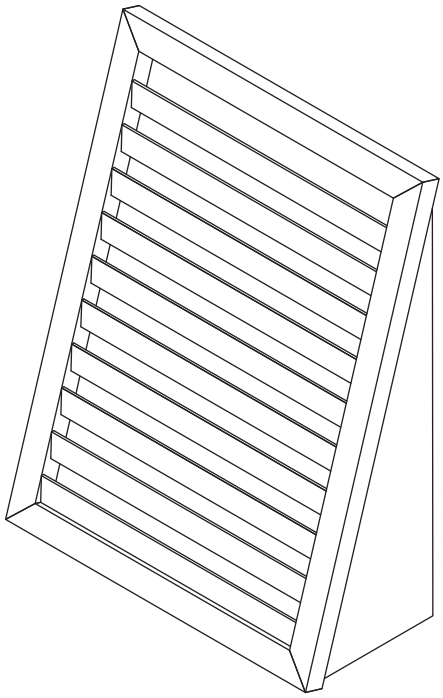

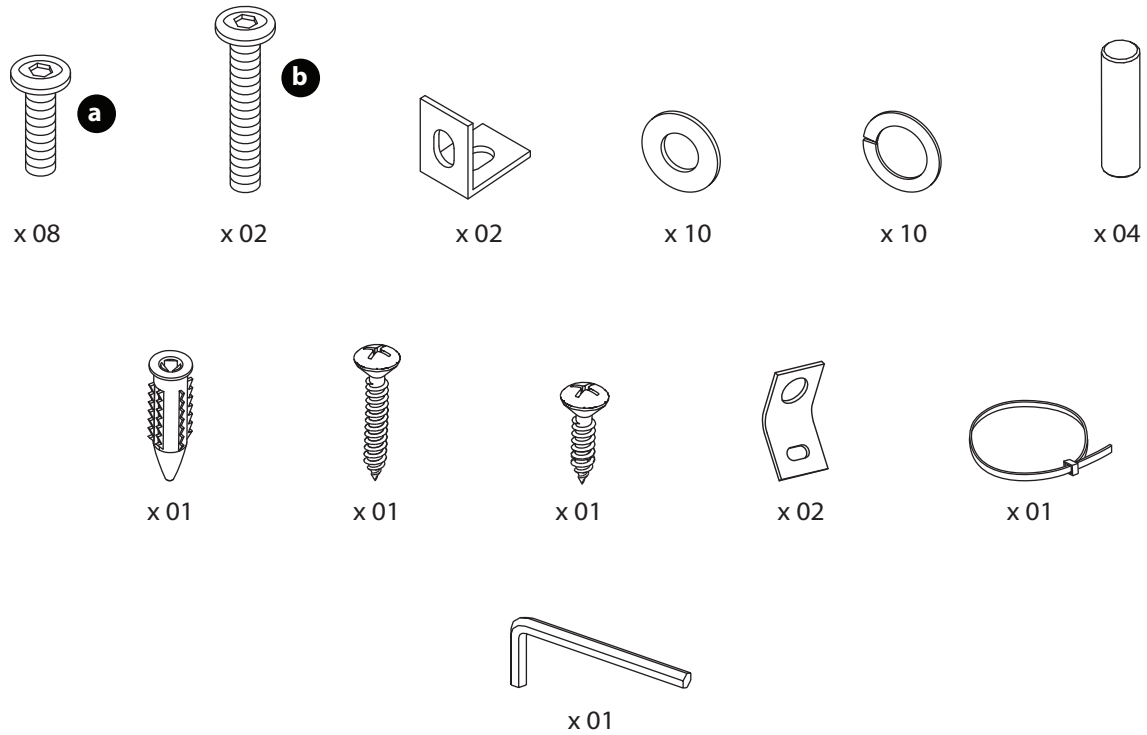

Made in China - r06

The Land of Nod
8135 River Drive • Morton Grove, IL 60053 • p: (800) 933-9904 • e: customerservice@landofnod.com • www.landofnod.com

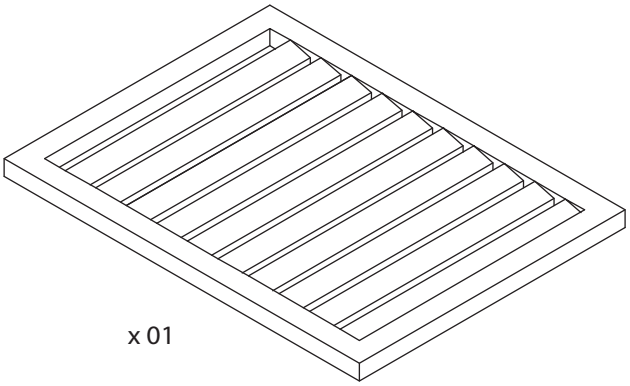

x 01

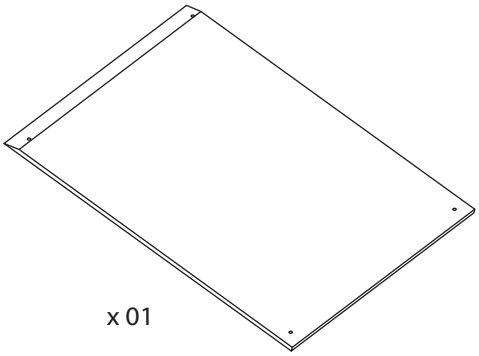

x 01

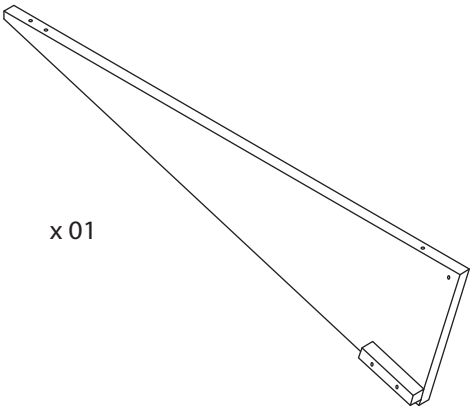

x 01

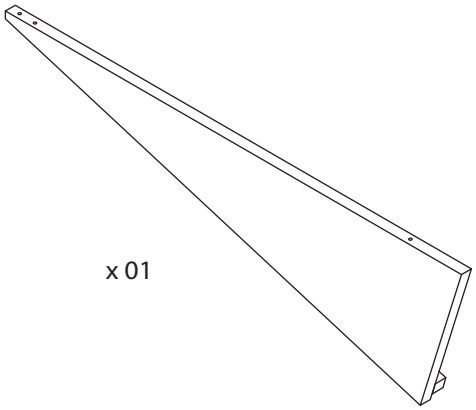

x 01

The Land of Nod

8135 River Drive • Morton Grove, IL 60053 • p: (800) 933-9904 • e: customerservice@landofnod.com • www.landofnod.com

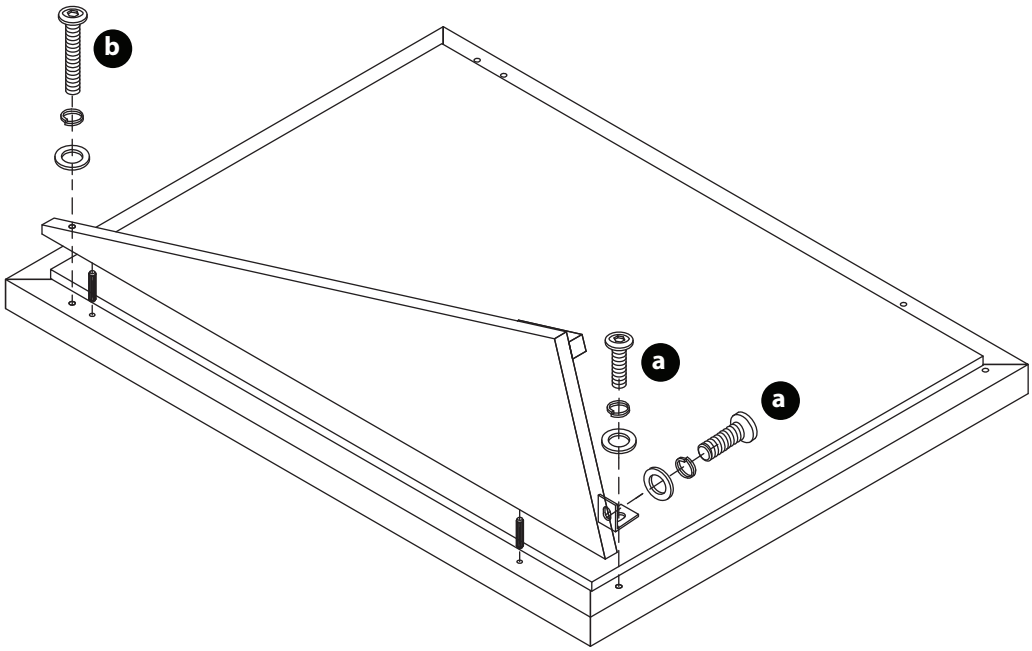

1

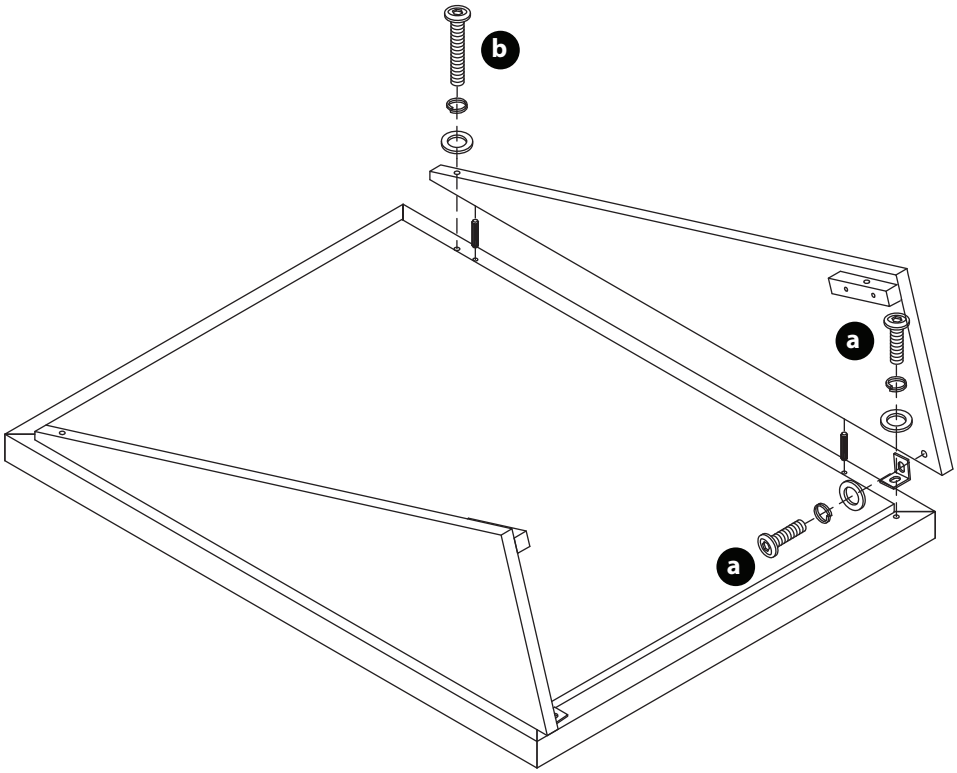

2

The Land of Nod

8135 River Drive • Morton Grove, IL 60053 • p: (800) 933-9904 • e: customerservice@landofnod.com • www.landofnod.com

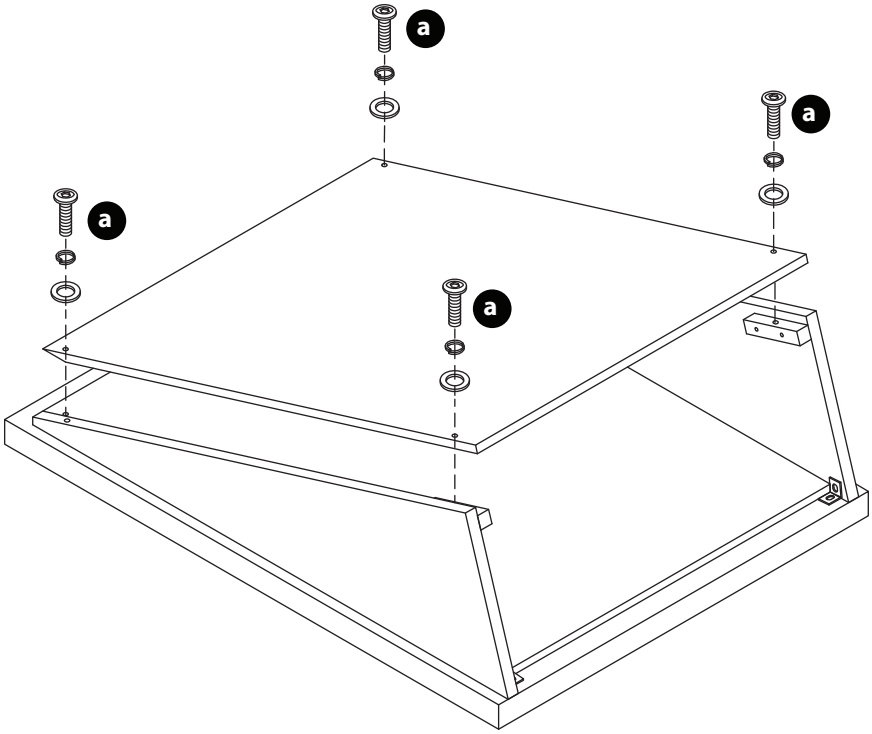

3

CLEANING AND CARE:

Clean surfaces with a dry or damp soft cloth. Do not use abrasive cleaners. Periodically check and tighten hardware as necessary.

The Land of Nod

8135 River Drive • Morton Grove, IL 60053 • p: (800) 933-9904 • e: customerservice@landofnod.com • www.landofnod.com

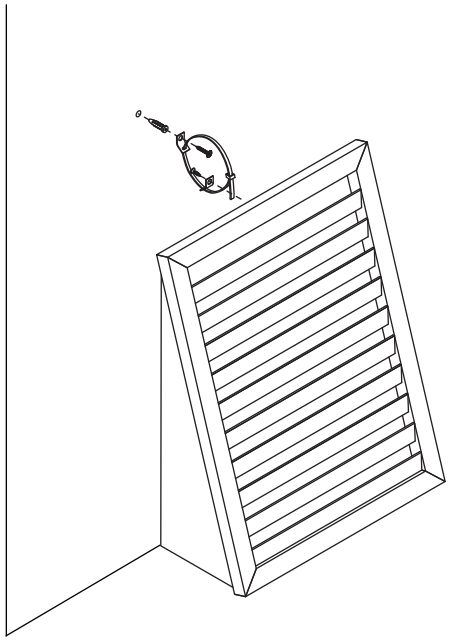

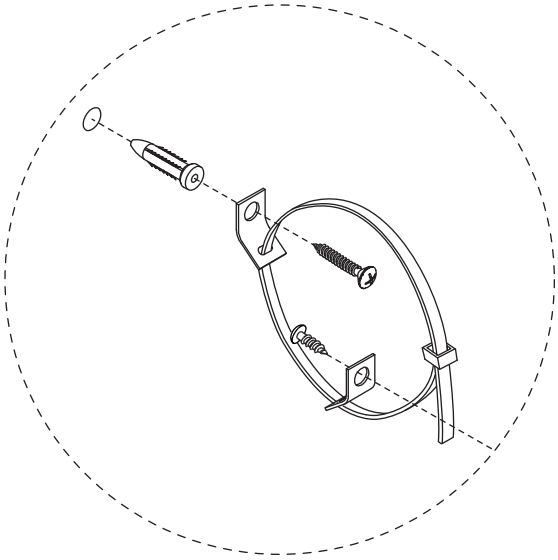

SAFETY MOUNTING INSTRUCTIONS:

For added safety and stability, it is recommended that the wall mounting hardware be installed. For safe mounting, it is essential to use wall anchors appropriate to your wall type (i.e. plaster, drywall, concrete, etc.). Mount to wood studs whenever possible.

NOTE: If you are unsure about your wall type or what mounting method you should use, consult a qualified professional or your local hardware store.

Serious or fatal crushing injuries can occur from furniture tip over. Use of tip-over restraints may only reduce, but not eliminate, the risk of tip-over. To help prevent tip-over, install tip restraint per instructions below.

The Land of Nod

8135 River Drive • Morton Grove, IL 60053 • p: (800) 933-9904 • e: customerservice@landofnod.com • www.landofnod.com