⚠ WARNING

- Do not place bed near windows where cords from blinds or drapes may strangle a child.
- Do not place items with a string, cord, or ribbon around a child's neck, such as hood strings or pacifier cords
- Do not suspend strings over a bed for any reason
- The minimum age shall be no less than 15 months
- The intended mattress dimension on the bed is 37 1/2"-38 1/2"W x 74"-75"L

The Land of Nod®

OAK PARK
FRAMED TWIN BED

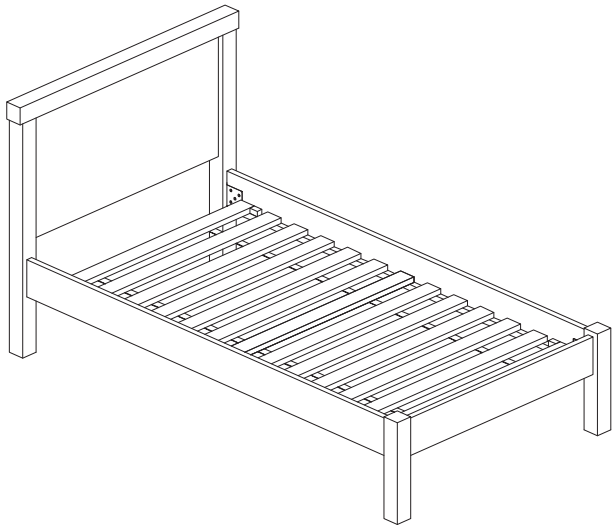

Thank you for purchasing the **Oak Park Framed Twin Bed**. This page lists all the contents included in the box. Please take the time to identify the hardware as well as the individual components to this product. As you unpack and prepare for assembly, place the contents on a carpeted or padded area to protect them from damage.
Note: 2 people are required to safely assemble this product.

HARDWARE

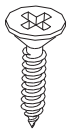

6 - screws

Missing hardware? Please call **800.933.9904** for replacements.
NOTE: Contains small parts. Keep away from small children.

⚠ **WARNING:** Adult Assembly Required

TOOLS REQUIRED

phillips head screwdriver

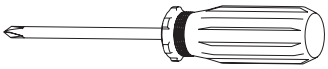

(We recommend the use of hand tools instead of power tools)

COMPONENTS

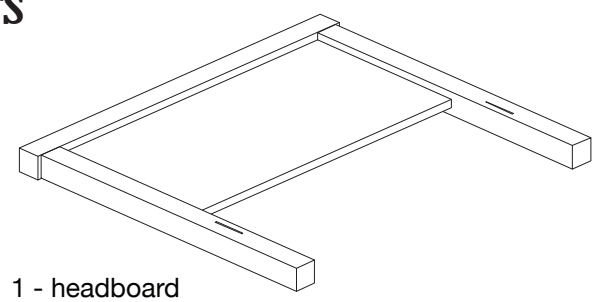

1 - headboard

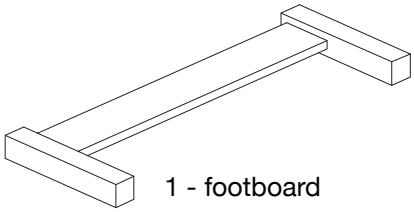

1 - footboard

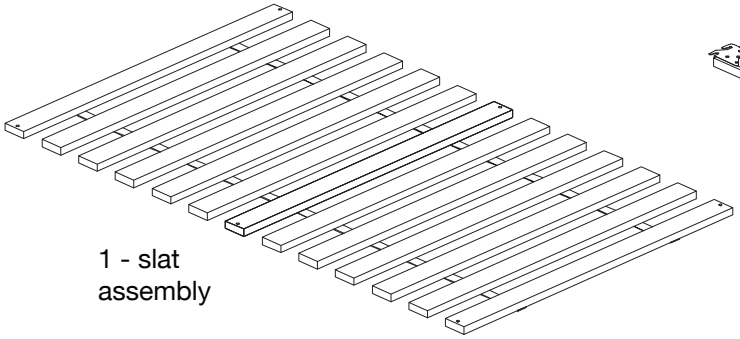

1 - slat assembly

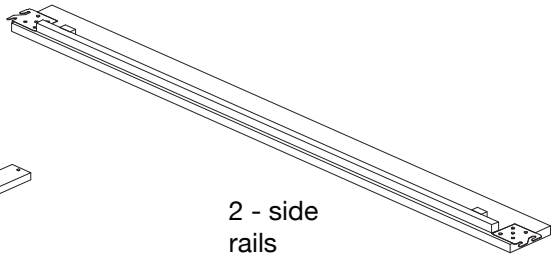

2 - side rails

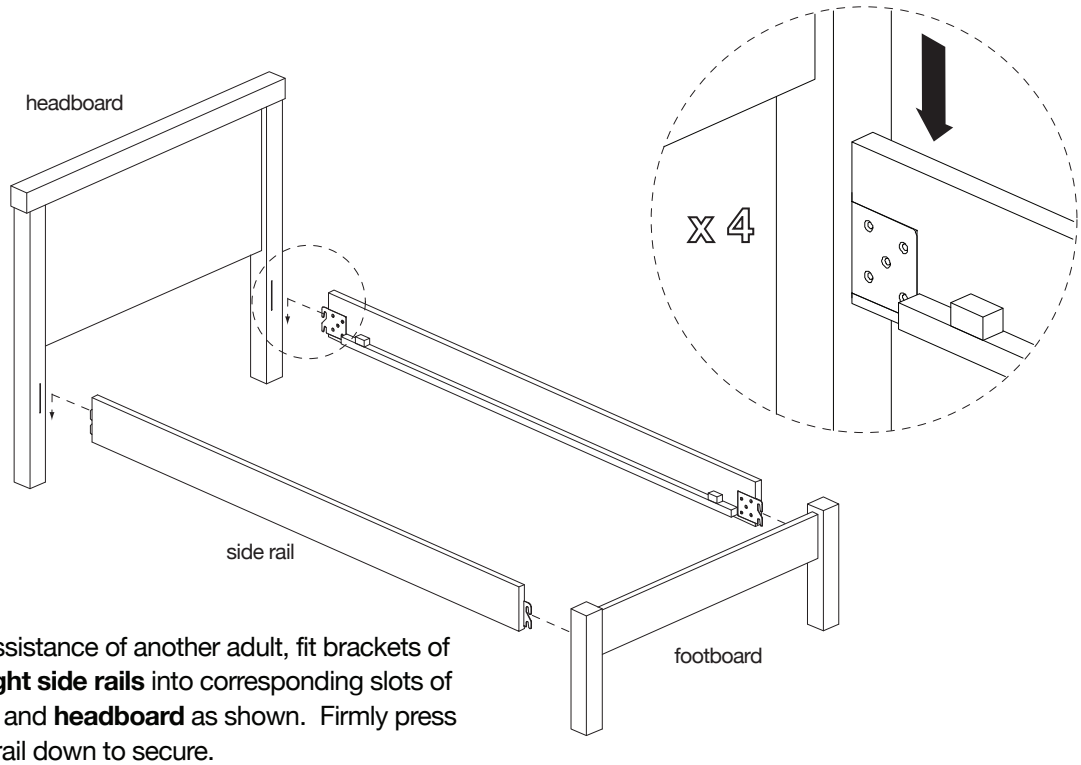

With the assistance of another adult, fit brackets of **left and right side rails** into corresponding slots of **footboard** and **headboard** as shown. Firmly press each side rail down to secure.

1

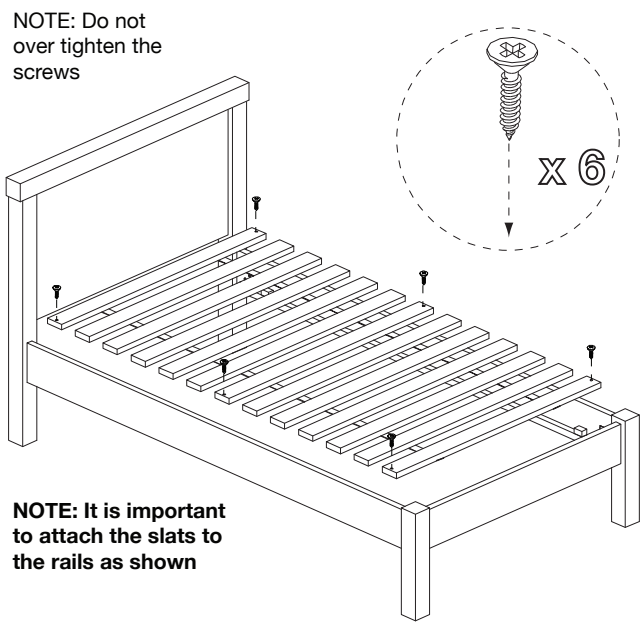

Attach **slat assembly** to side rails with 6 **screws** as shown, using a **phillips head screwdriver**. Do not over tigthen the screws. Make sure straps of slat assembly are facing downwards as shown.
Assembly is now complete.

2

CLEANING AND CARE

Clean surfaces with a dry or damp soft cloth. Do not use abrasive cleaners. Do not use furniture wax or polish as the unit is finished with a protective clear lacquer.